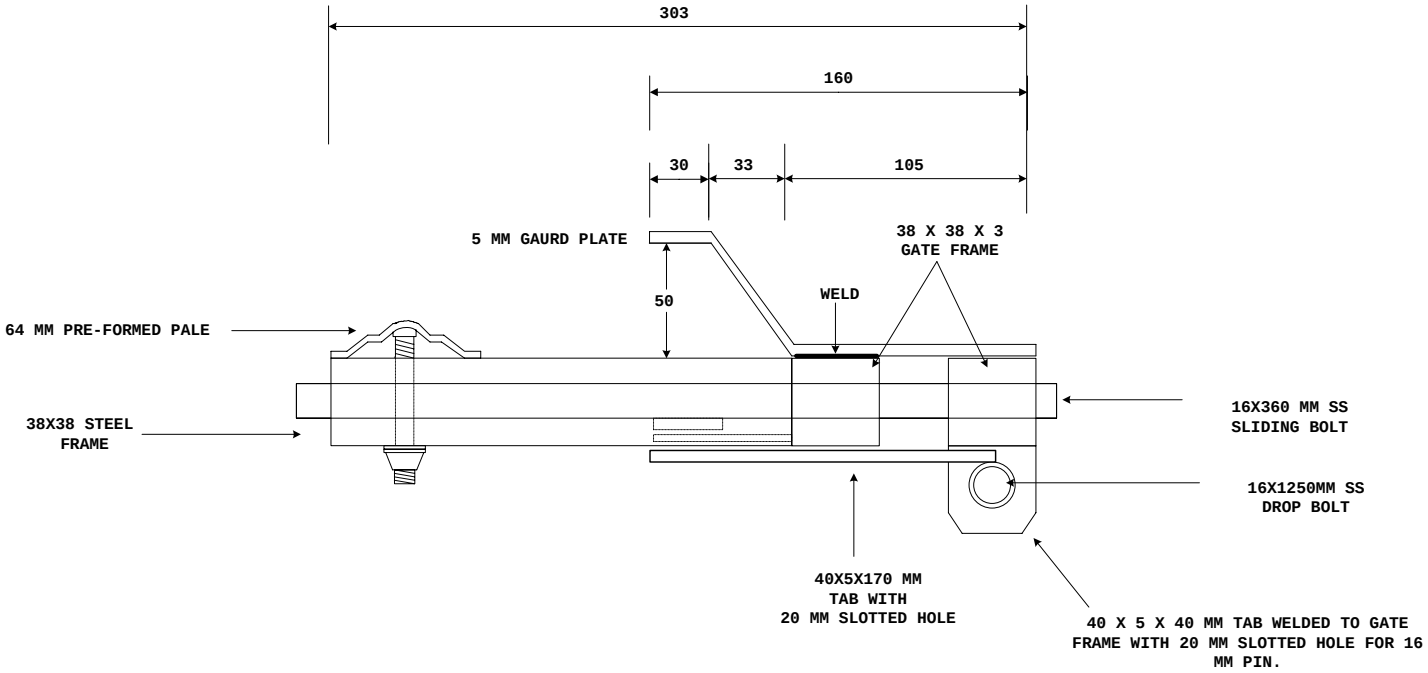

NOTES:
1) ALL STEEL WORK TO BE IN ACCORDANCE WITH SABS 1200 HA
2) ALL STRUCTURAL STEEL TO BE HOT DIPPED GALVANISED AS PER SABS 1461. UNLESS OTHERWISE SPECIFIED
3) ALL WELDS: 6MM FILLET WELD, ALL ROUND

STEEL PALISADE GATE HANDLE.

Figure: 4